FISHER & PAYKEL

DISHWASHER

85731-A DW60U4EI3

SPARE PART GUIDE

AA

CONTENTS

Introduction	3
Chassis & Tub components	4
Basket components	8
Spray Arm components	12
Base & flood components	16
Heat pump components	20
Door components	22

INTRODUCTION

Voltage

220 –240 50Hz

Kit parts

Where a part number is shown against the descriptions for kit components, they are also available as separate items. In addition, some parts may be supplied with these kits that are not available as separate items, and are therefore either not listed, or a part number is not shown against the part description in this guide.

Part list key

You may see one or more 'keys' in the first column of the part list tables, see below for explanations:

NI	Indicates the part is not illustrated in the diagram.
NOT USED	Indicates the diagram part reference is not used in this manual.
NS	Indicates the part is not servicable.
NM	Not available for this model.

For more information about our products and services, and for detailed contact information, visit our website:

NZ https://www.fisherpaykel.co.nz
AU https://www.fisherpaykel.com.au

CHASSIS & TUB COMPONENTS

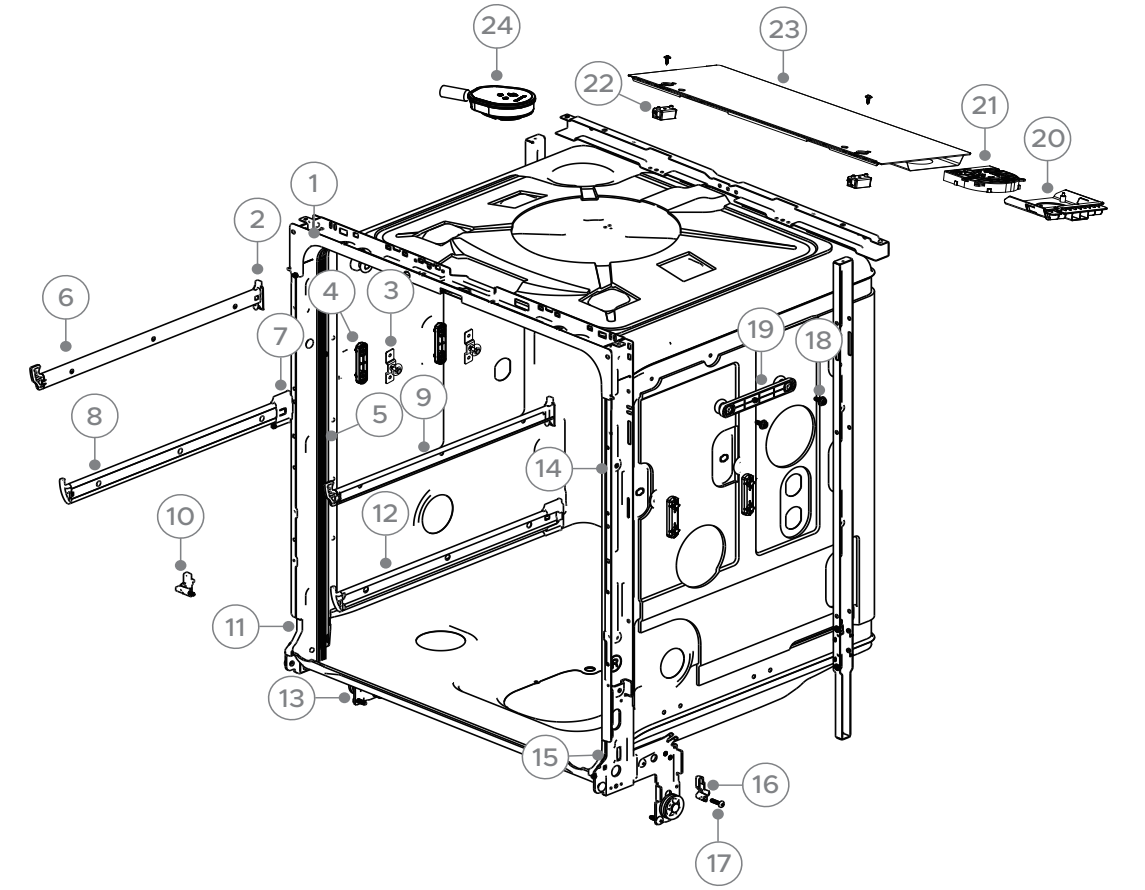

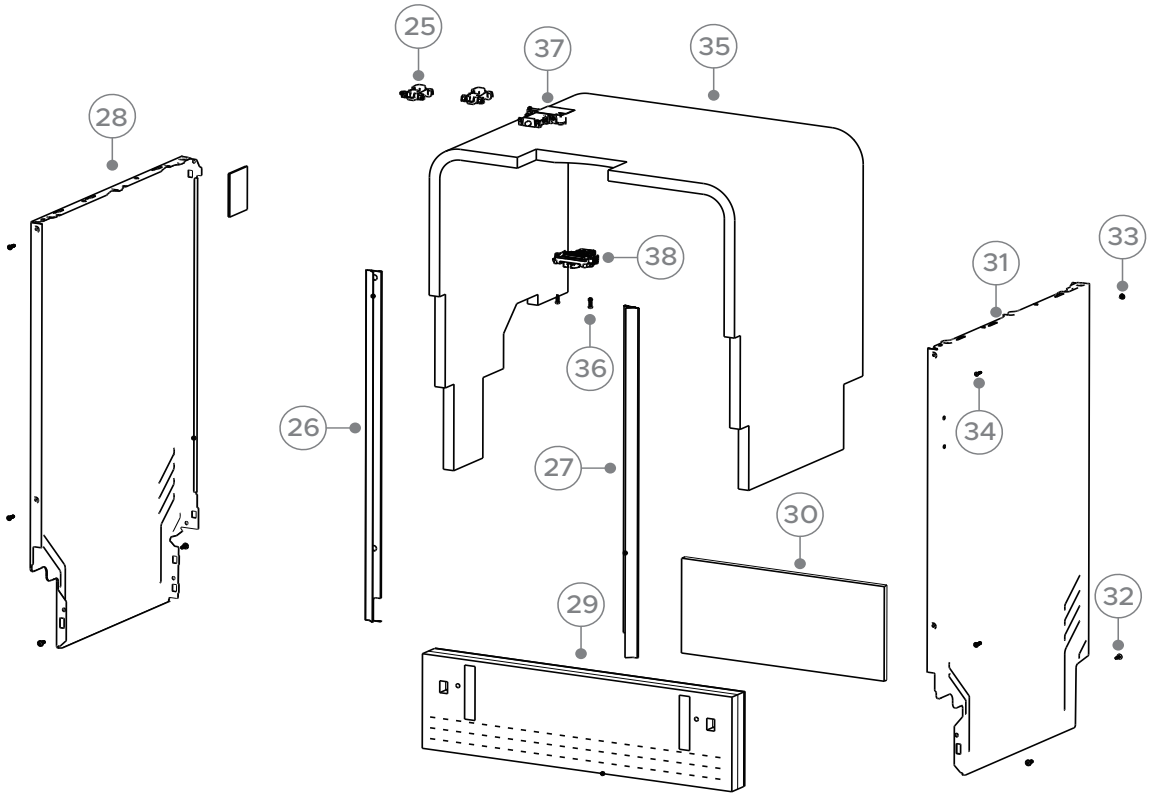

DWG 007512

CHASSIS & TUB COMPONENTS

PART	PART NUMBER	PART DESCRIPTION
1	H0120101839A	SUPPORT CROSSPIECE
2	H0120200325	END CAP RAIL
3	H0120802832A	MID RAIL SUPPORT
4	H0120200872	RAIL SUPPORT ASSY
5	H0120300248MA	STRIP SEALING DOOR
6	H0120811258	RAIL BASKET RH
7	H0120203862	SLIDE LIMIT BLOCK
8	H0120811260A	SLIDER ASSEMBLY(LEFT)
9	H0120811258A	RAIL BASKET LH
10	H0120204008	STOPPER AUTO OPEN LEFT
11	H0120203997	FASTENER LEFT
12	H0120811259A	SLIDER ASSEMBLY(RIGHT)
13	H00330802023A	SCREW
14	H0120200393	PLUG
15	H0120204049	FASTENER RIGHT
16	H0120204011	STOPPER AUTO OPEN RIGHT
17	H00330802095A	SCREW
18	H0010650254G	SCREW ST4.8 X12 SERRATED
19	H0120804224B	RAIL SUPPORT ASSEMBLY
20	H0120203934	FAN HOUSING AIR CURTAIN
21	H0120806103	FAN
22	H0120204027	MOUNT AIR CURTAIN
23	H0120807865	AIR CURTAIN DUCT ASSY
24	H0120806695	HOUSING THERMO DRY
25	H0120400216	LIGHTS INTERIOR
26	H0120300100B	SEALING STRIP LEFT
27	H0120300100C	SEALING STRIP RIGHT
28	H0120102482	PANEL SIDE LH
29	H0120301379B	SKIRTING BOARD COTTON FELT
30	H0120301536A	FOAM
31	H0120102484	PANEL SIDE RH
32	H0000600005	SCREW SELF TAPPING LOCKING

Continued on next page

CHASSIS & TUB COMPONENTS

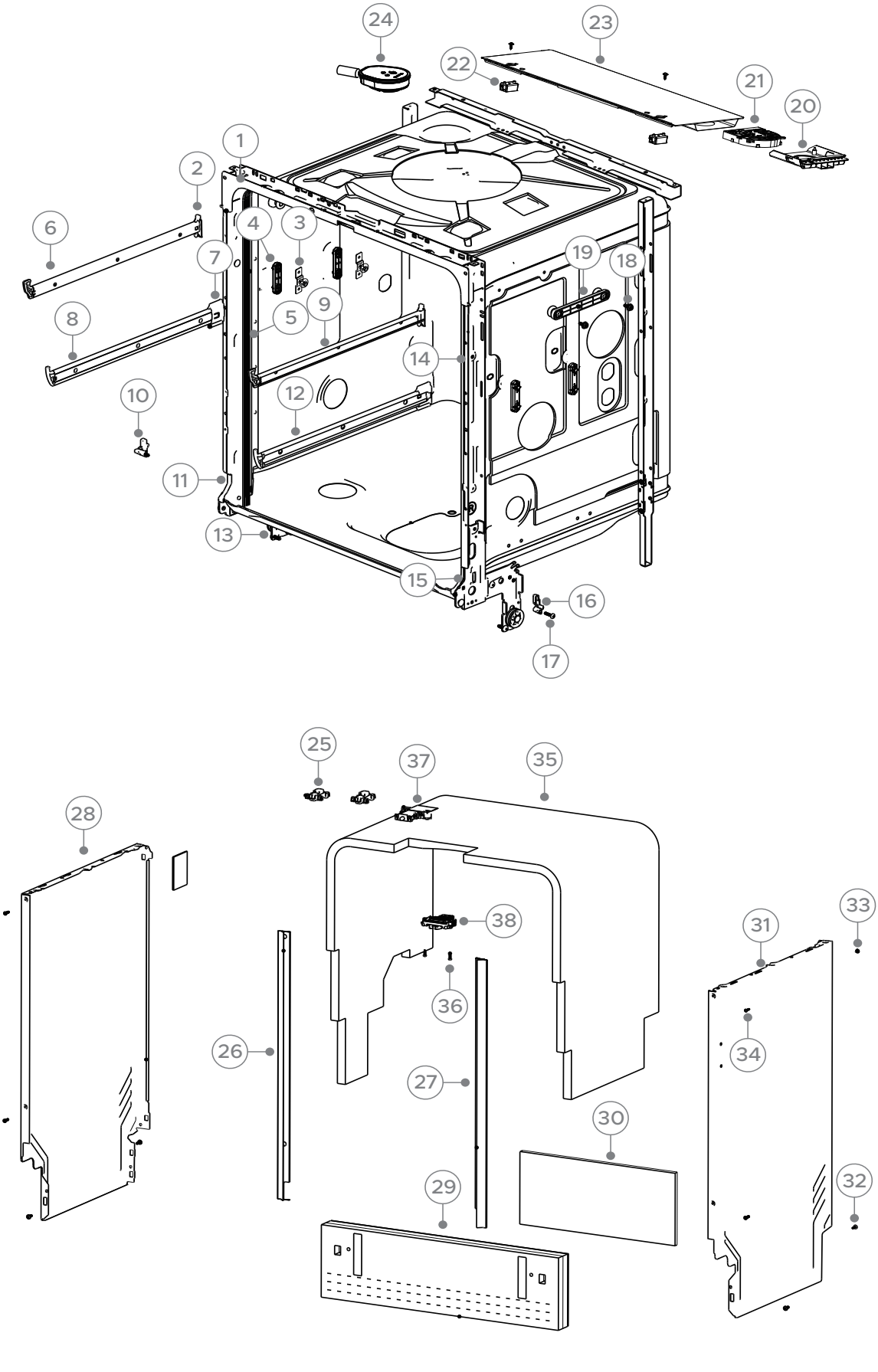

DWG 007512

CHASSIS & TUB COMPONENTS

PART	PART NUMBER	PART DESCRIPTION
33	H012G8010123	BOLT
34	H0120600754	SCREW ST3.5 17
35	H0120301522	COTTON BLANKET
36	H0120600160	SCREW NST4.2 X 13
37	H0120803964	DOOR LOCK/HOOK ASSEMBLY
38	H0120808254	WAX MOTOR ASSEMBLY

BASKET COMPONENTS

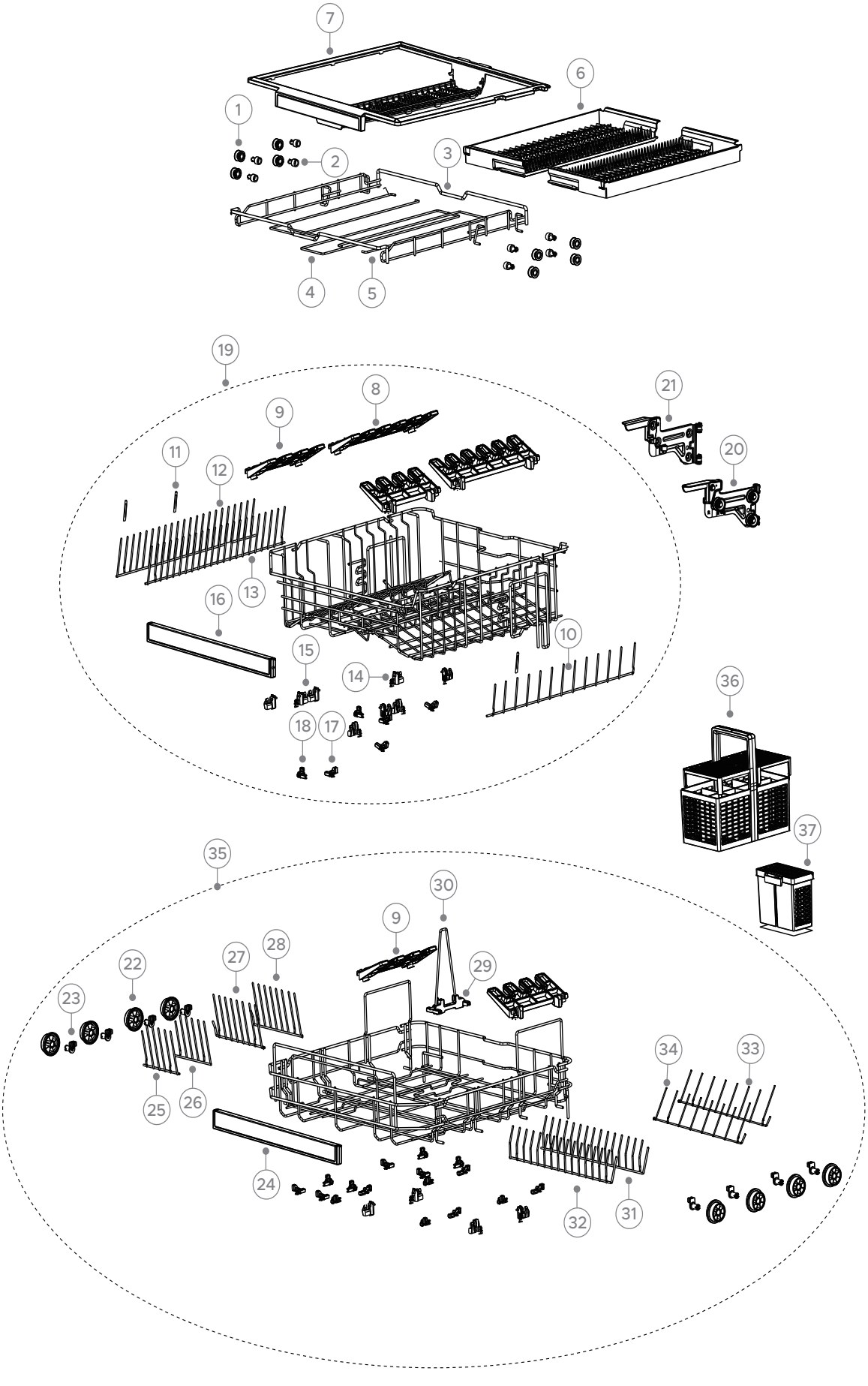

DWG 007513

BASKET COMPONENTS

PART	PART NUMBER	PART DESCRIPTION
1	H0120200871A	WHEEL SUPPORT
2	H0120201141	ROLLER RAIL SUPPORT
3	H0120101078	3RD RACK SUPPORT
4	H0120101078A	3RD RACK SUPPORT-1
5	H0120101078B	3RD RACK SUPPORT -2
6	H0120808772	CUTLERY RACK ASSEMBLY
7	H0120203982	CUTLERY RACK (MOVABLE)
8	H0120203993	CUPRACK LONG
9	H0120203994	CUPRACK SHORT
10	H0120102742	GLASS FENCE COMB
11	H0120204226	COVER SHELF PROTECTION
12	H0120102737	MIDDLE RACK COMB LEFT
13	H0120102741	MIDDLE RACK COMB RIGHT
14	H0120201180C	CUP RACK SUPPORT RIGHT
15	H0120201180B	CUP RACK SUPPORT LEFT
16	H0120808774	HANDLE ASSEMBLY UPPER BASKET
17	H0120203991B	FOLDDOWN CLIP RIGHT
18	H0120203990B	FOLDDOWN CLIP LEFT
19	H0120808085AA	UPPER SHELF ASSEMBLY
20	H0120802975	LIFTING MECHANIC RIGHT
21	H0120802976	LIFTING MECHANIC LEFT
22	H0120203916B	LOWER BASKET WHEEL LARGE
23	H0120204001B	AXLE LOWER BASKET
24	H0120808773	HANDLE ASSEMBLY LOWER BASKET
25	H0120102735	FOLDDOWN COMB BB LEFT
26	H0120102736	FOLDDOWN COMB BB RIGHT
27	H0120102730	FOLDDOWN COMB BB2 LEFT
28	H0120102731	FOLDDOWN COMB BB2 RIGHT
29	H0120204337	LARGE ITEM CLIP
30	H0120102913	LARGE ITEM SUPPORT
31	H0120102733	FOLDDOWN COMB SOUP RIGHT
32	H0120102732	FOLDDOWN COMB SOUP LEFT
33	H0120104479	FOLDDOWN COMB PLATES LEFT

Continued on next page

BASKET COMPONENTS

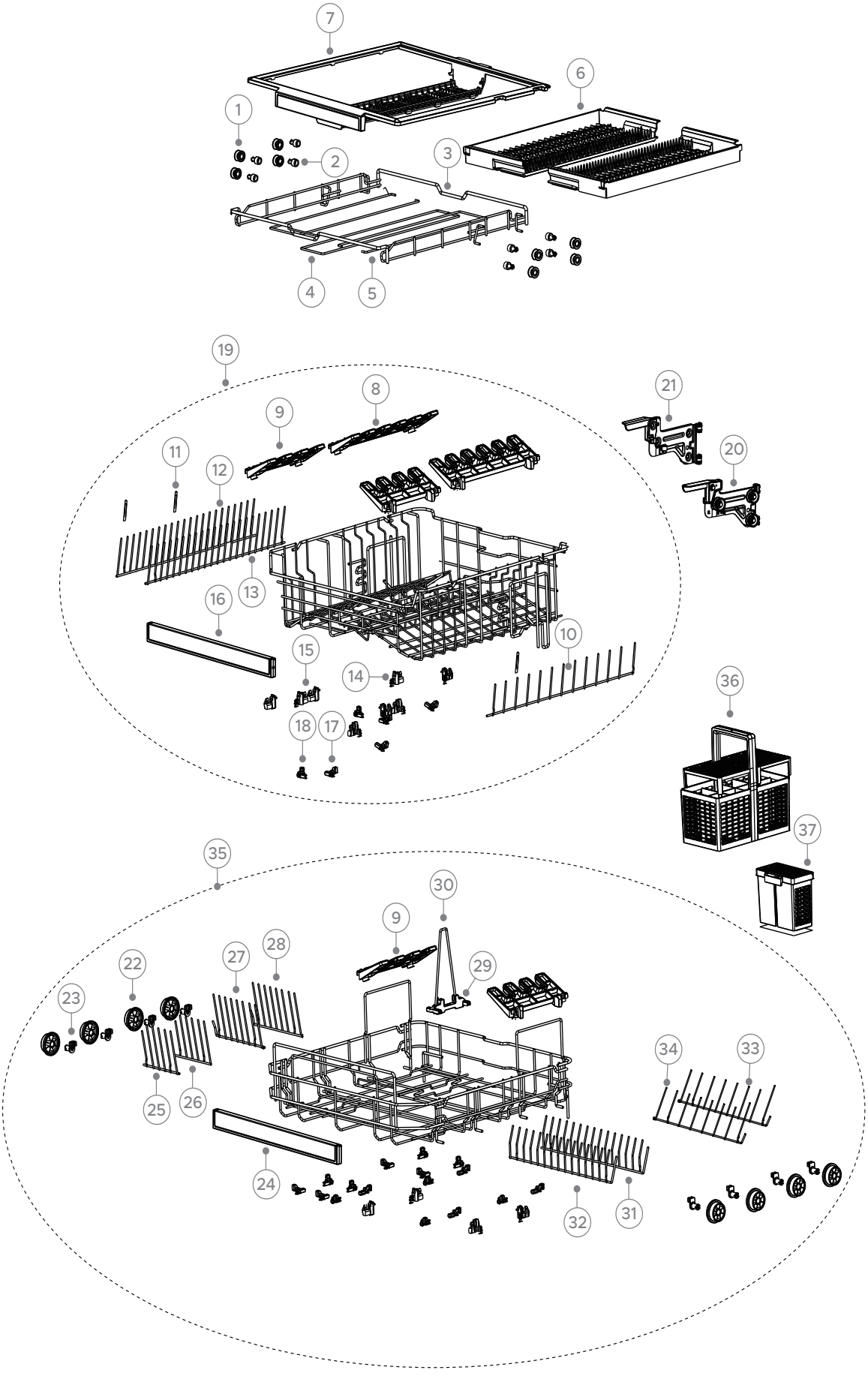

DWG 007513

BASKET COMPONENTS

PART	PART NUMBER	PART DESCRIPTION
34	H0120104480	FOLDDOWN COMB PLATES RIGHT
35	H0120808087AAA	LOWER SHELF ASSEMBLY
36	H0120802868B	CUTLERY BASKET
37	H0120802868C	CONTAINER CHOPSTICKS

SPRAY ARM COMPONENTS

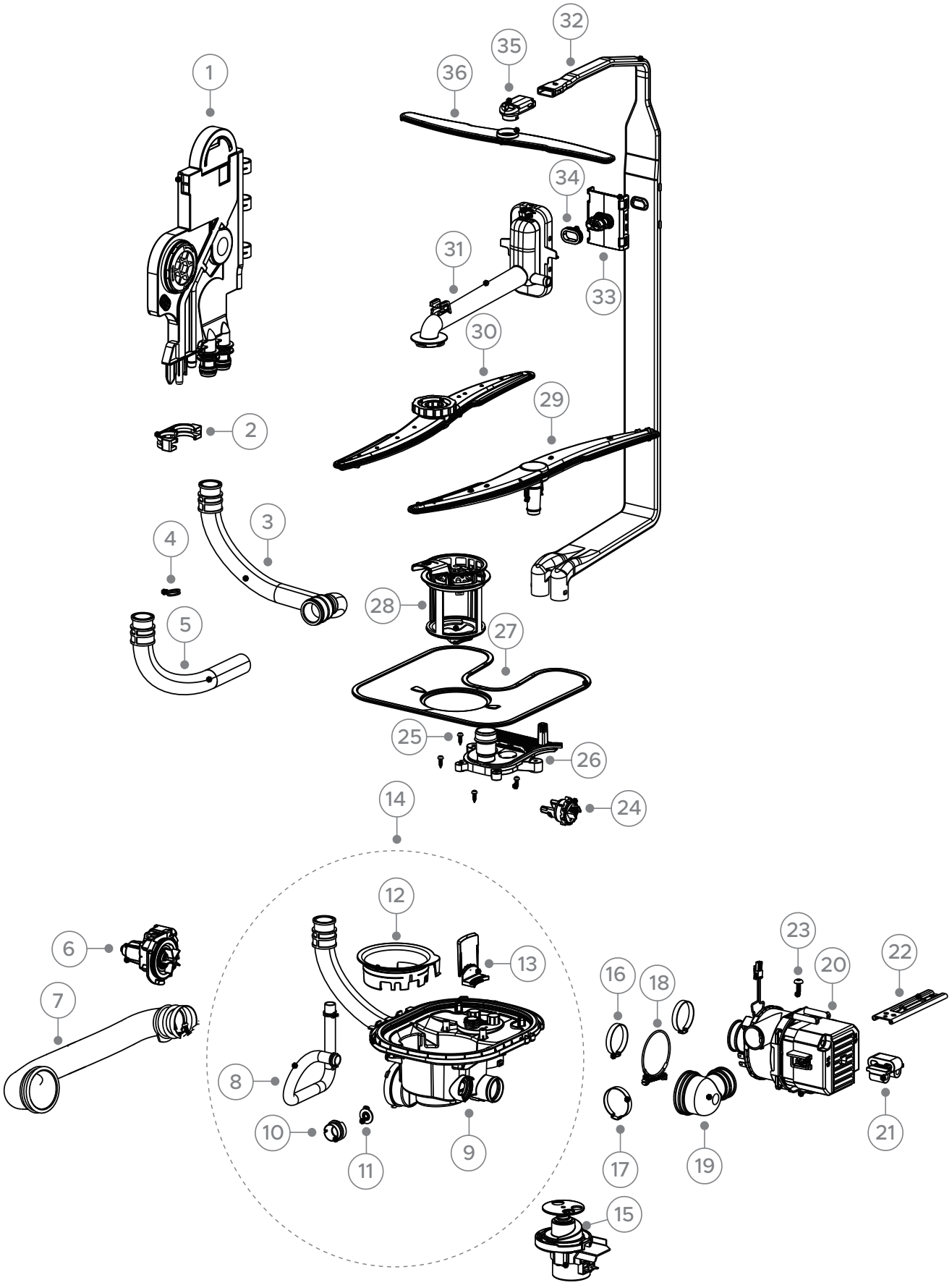

DWG 007514

SPRAY ARM COMPONENTS

PART	PART NUMBER	PART DESCRIPTION
1	H0120809416B	BREATHING APPARATUS ASSEMBLY
2	H0120203999	FASTENER WEIR
3	H0120204649B	DRAIN PIPE
4	H012G1040030	PIPE CLAMP
5	H0120203908C	HOSE DRAIN EXTERNAL
6	H0120400592	DRAIN PUMP
7	H0120301358	CONNECTING PIPE
8	H0120802421	INLET PIPE ASSY
9	H0120204786	SUMP
10	H0120200374	FRAME NON RETURN VALVE
11	H0120200373	FLAP NON RETURN VALVE
12	H0120204787	SUMP BUILD-IN PART(WASHING PUMP)
13	H0120204788	SUMP BUILD-IN PART(DRAIN PUMP)
14	H0120809435	SUMP ASSEMBLY
15	H0120400608	DIVERTER
16	H0120105775	CLAMP HOSE 32-50MM
17	H012G1040028	CLAMP HOSE 20-32MM
18	H00297023000100B	COUPLING
19	H0120301357	CONNECTING PIPE MOTOR-SUMP
20	H0120400061FB	WASHING HEATING MODULE
21	H0120301367	CUSHIONING
22	H0120103707	INSTALLATION OF FIXED PARTS
23	H00330802023A	SCREW
24	H0120400076D	SENSOR TEMP/TURBIDITY
25	H0120600160	SCREW NST4.2 X 13
26	H0120203816A	MOUNT LOWER SPRAY ARM
27	H0120102548	FILTER PLATE
28	H0120808157	FINE FILTER ASSEMBLY
29	H0120807815	LOWER SPRAY ARM ASSY
30	H0120807811	MIDDLE SPRAY ARM ASSEMBLY
31	H0120807281A	KIT CONNECTOR MIDDLE SPRAY ARM
32	H0120204007	WATER DIVERSION PIPE
33	H0120203832	MIDDLE SPRAY ARM REAR BOSS

Continued on next page

SPRAY ARM COMPONENTS

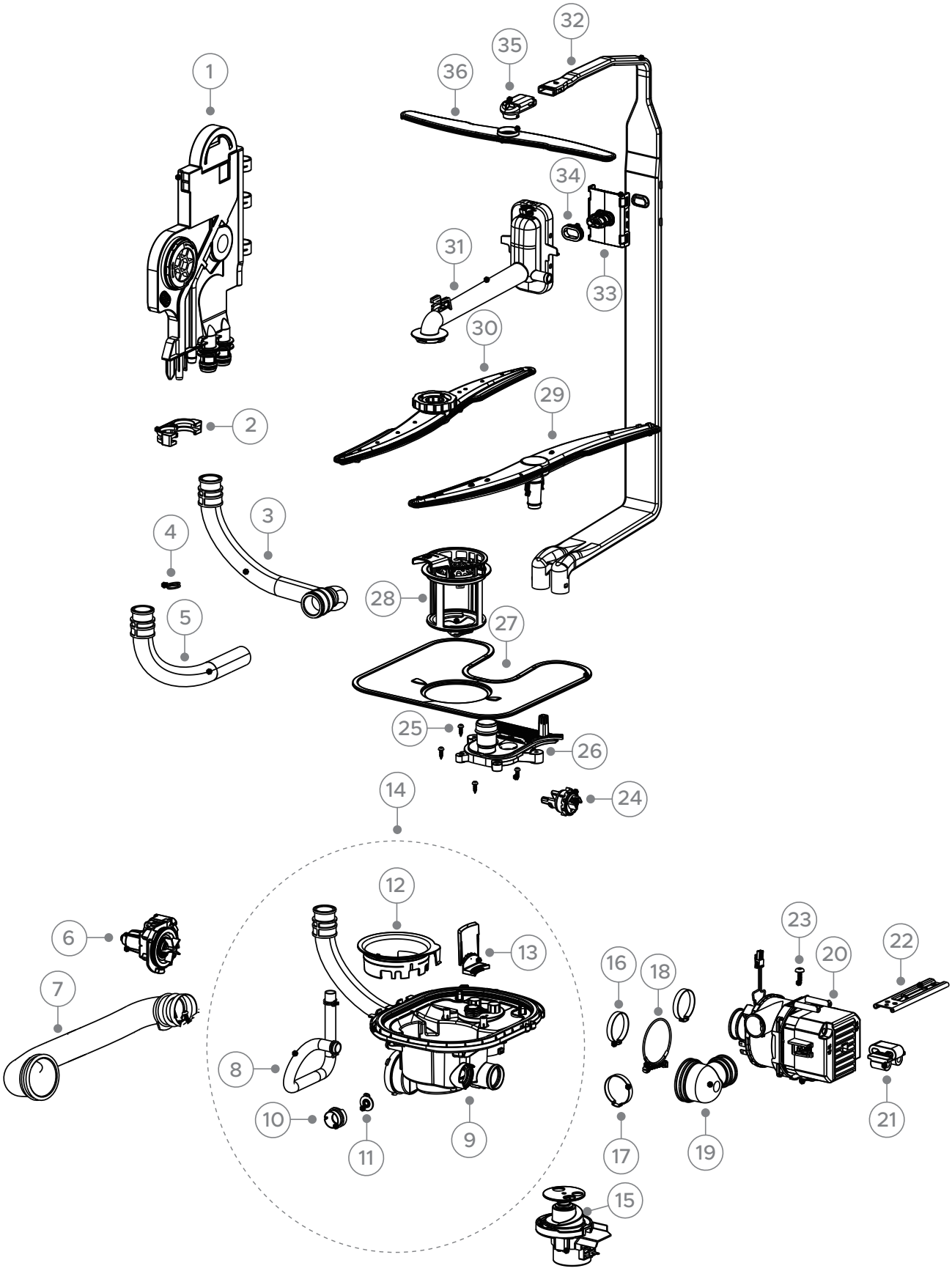

DWG 007514

SPRAY ARM COMPONENTS

PART	PART NUMBER	PART DESCRIPTION
34	H0120300667	MIDDLE SPRAY REAR SEAL
35	H0120204000	MOUNT UPPER SPRAY ARM
36	H0120808392	UPPER SPRAY ARM ASSY

BASE & FLOOD COMPONENTS

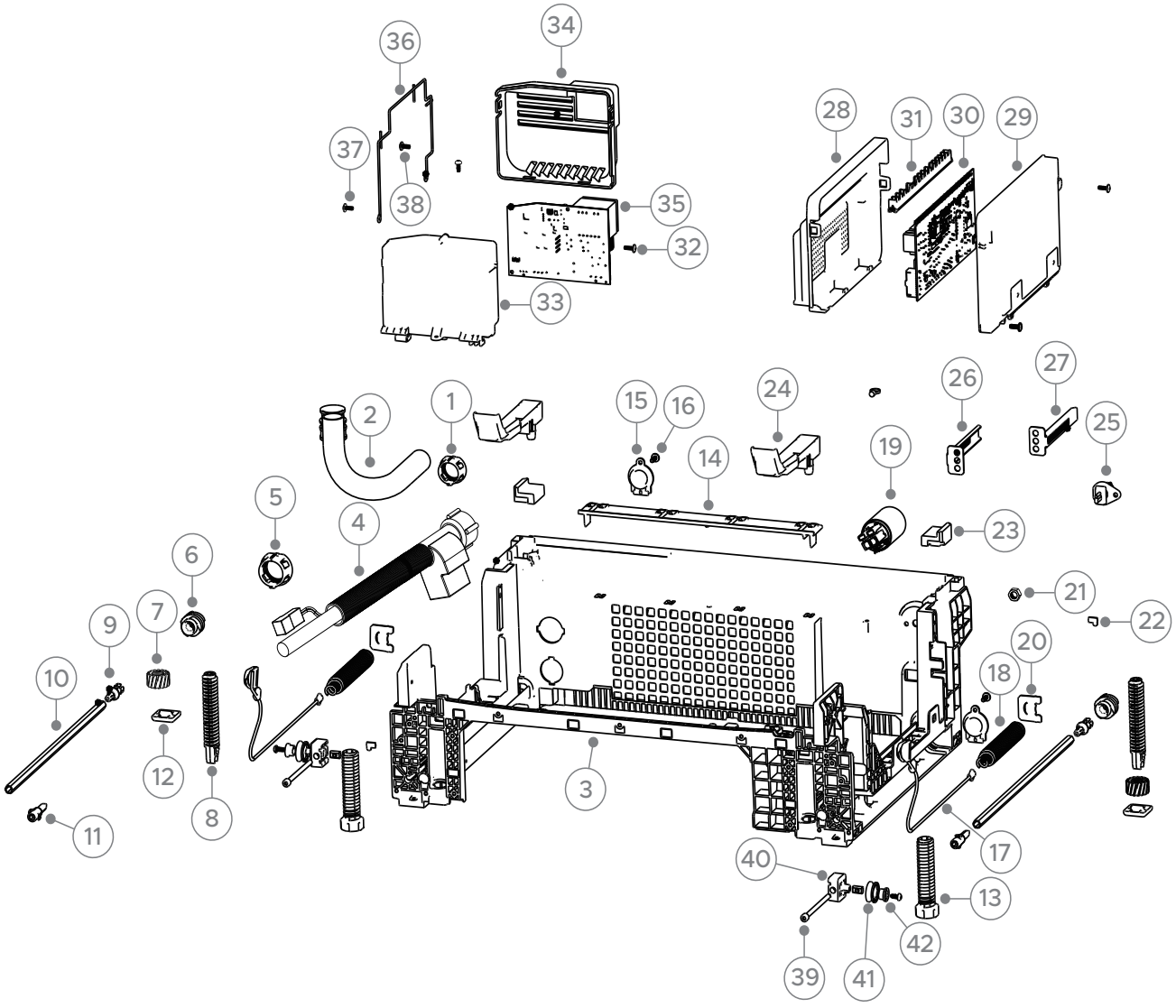

DWG 007515

BASE & FLOOD COMPONENTS

PART	PART NUMBER	PART DESCRIPTION
1	H0120203266	FITTING DRAINAGE PIPE
2	H0120203908C	HOSE DRAIN EXTERNAL
3	H0120204785	BASE FRAME(FREE STANDING)
4	H0120808033	SOLENOID VALVE ASSEMBLY KIT
5	H0120203853	FASTENER (AQUASTOP SUPPORT)
6	H0120201489	WORM
7	H0120201487	HELICAL GEAR
8	H0120201485	ADJUSTMENT LEVER
9	H0120201488	ADJUSTING SHAFT
10	H0120201844B	LEVER ADJUST
11	H0120202159	KNOB CONNECTOR
12	H0120201486	FOOT SUPPORT
13	H0120201934	ADJUSTABLE FOOT FRONT
14	H0120204800	WIND DEFLECTOR
15	H0120204795	PLUGGING
16	H0000600005	SCREW SELF TAPPING LOCKING
17	H0120808436C	SPRING CONNECTION ROPE
18	H0120102681	HINGE SPRING
19	H0024000247U	INTERFERENCE SUPPRESSOR
20	H0120102592	FIXED PLATE (SPRING)
21	H0000600239	NUT
22	H0120102623	STATOR
23	H0120300158	PAD VIBRATION
24	H0120203801	WATER DRAIN
25	H0120400238B	POWER CORD
26	H0120102272	BRACKET ADJUST TIE ROD LH
27	H0120102274	BRACKET ADJUST TIE ROD RH
28	H0120204741	POWER BOARD BOX COVER
29	H0120204742	POWER BOARD BOX
30	H0121800245A	THE POWER SUPPLY BOARD
31	H0120204745	TERMINAL FIXING PARTS
32	H0000600005	SCREW SELF TAPPING LOCKING
33	H0121800264	VARIABLE FREQUENCY BOARD

Continued on next page

BASE & FLOOD COMPONENTS

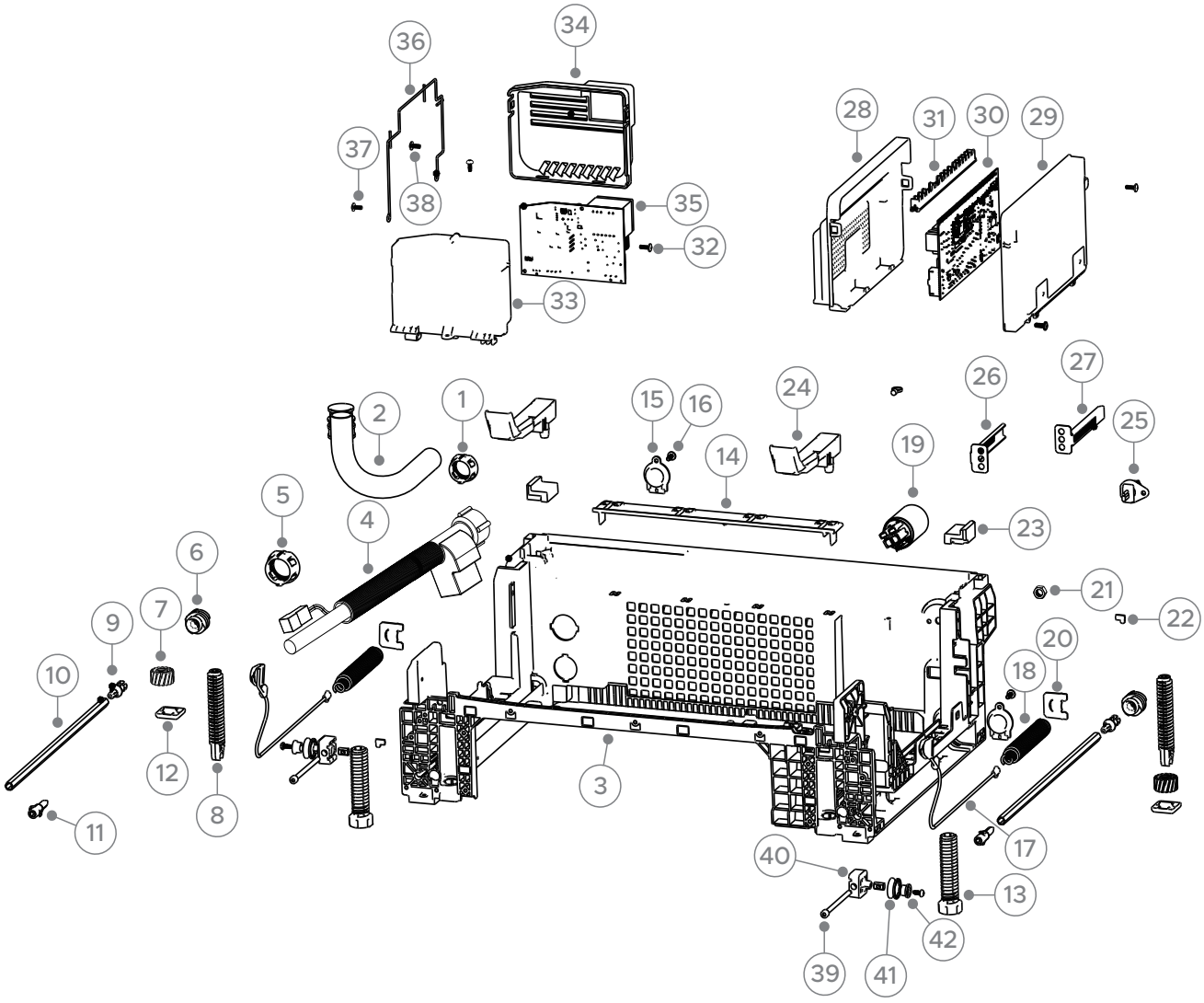

DWG 007515

BASE & FLOOD COMPONENTS

PART	PART NUMBER	PART DESCRIPTION
34	H0120204789	VARIABLE FREQUENCY BOARD BOX
35	H0121800264	VARIABLE FREQUENCY BOARD
36	H0020600179	BOLT
37	H0120104466A	WIRE FIXING BRACKET
38	H0000600006	SCREW
39	H0120600197B	BOLT ADJUSTABLE ROLLER
40	H0120102859	ROLLER RACK
41	H0120203605A	PULLEY
42	H0120102611	FIXED SHAFT ADJUSTABLE ROLLER

HEAT PUMP COMPONENTS

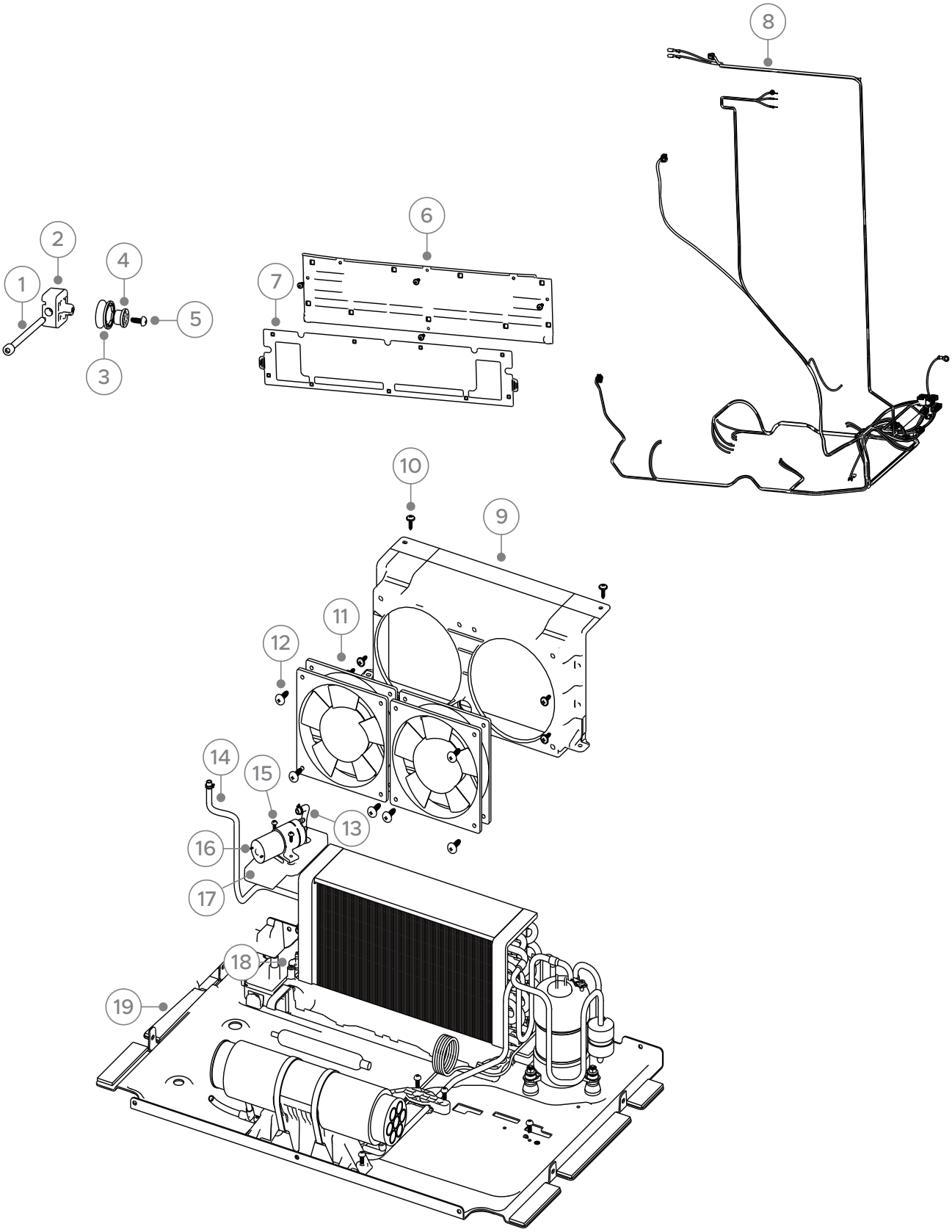

DWG 007516

HEAT PUMP COMPONENTS

PART	PART NUMBER	PART DESCRIPTION
1	H0120600197B	BOLT ADJUSTABLE ROLLER
2	H0120102859	ROLLER RACK
3	H0120203605A	PULLEY
4	H0120102611	FIXED SHAFT ADJUSTABLE ROLLER
5	H0020600179	BOLT
6	H0120204799	FRONT COVER
7	H0120204792	FILTER GATE
8	H0120400609A	BOTTOM HARNESS
9	H0120204796	FASTENING PARTS (FOR FANS)
10	H012G8010102	SCREW ST3.5 13
11	H0120809455	FAN
12	H00330802023A	SCREW
13	H0120809610	CONNECTING PIPE
14	H0120809611	CONNECTING PIPE
15	H00330802025A	SCREW FASTENING
16	H0124000033	SUCTION PUMP
17	H0120204797	FIX PART
18	H0120204802	CONNECTORS
19	H0120809433	HEAT PUMP MODULE

DOOR COMPONENTS

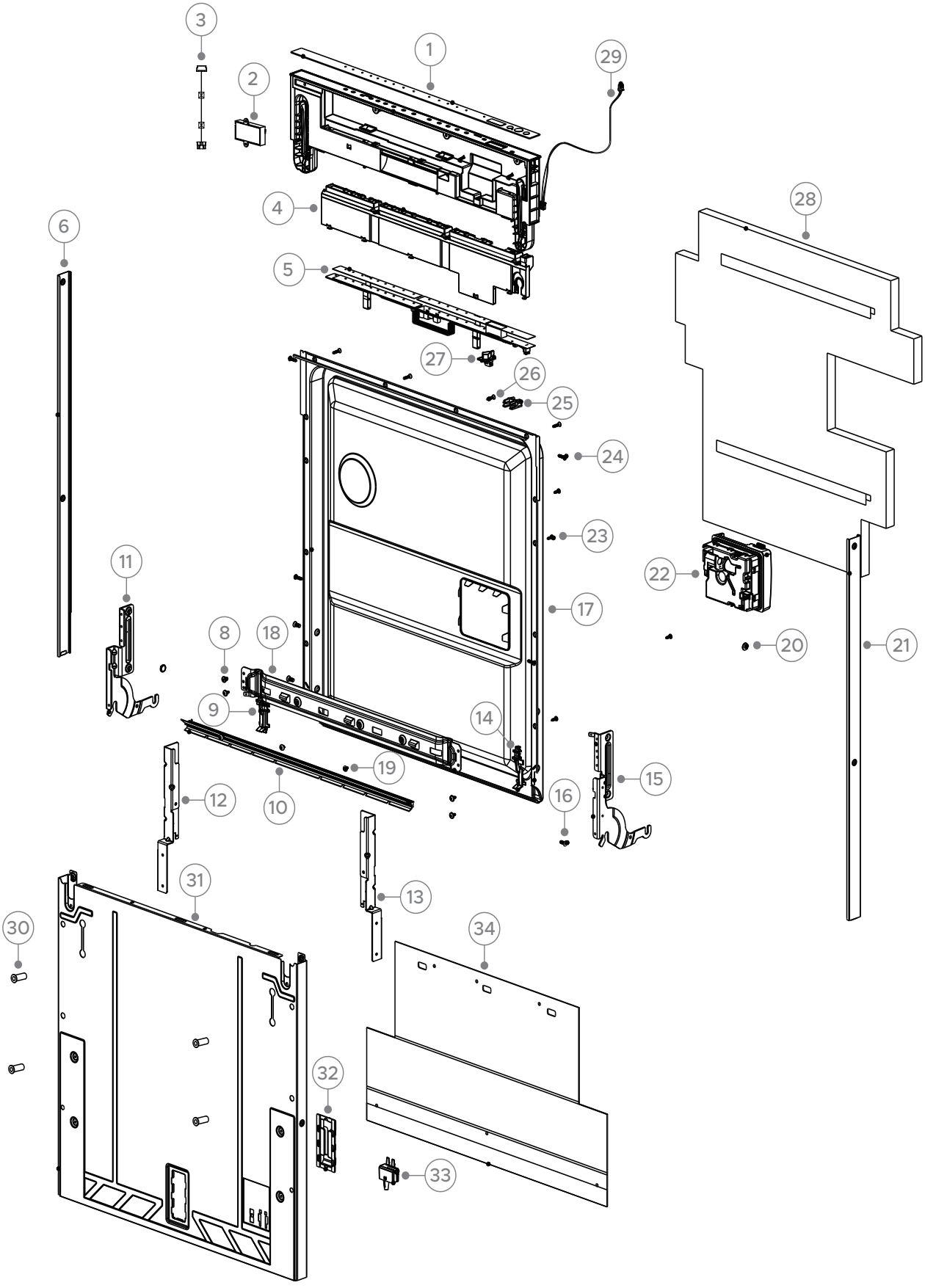

DWG 007517

DOOR COMPONENTS

PART	PART NUMBER	PART DESCRIPTION
1	H0120807900DAA	MAIN CONTROL BOARD ASSEMBLY
2	H0021800217AC	MODULE WIFI
3	H0120400537	HARNESS GENERAL
4	H0120203808	CONTROL PANEL
5	H0120203809	DISPLAY BOARD BOX
6	H0121800104W	DISPLAY BOARD
7	H0120102551	DOOR SHELL MOLDING(LEFT)
8	H012G8010123	BOLT
9	H0120203598	FIXING PART RH
10	H0120300368D	DOOR GASKET
11	H0120102553	DOOR HINGE (LEFT)
12	H0120102953	FIXING PLATE DOOR HINGE LEFT
13	H0120102954	FIXING PLATE DOOR HINGE RIGHT
14	H0120203612	FIXING PART RH
15	H0120102552	DOOR HINGE (RIGHT)
16	H0120600023	SCREW M5 10 SS
17	H0120102492A	INNER DOOR
18	H0120100369B	PORTAL BEAM
19	H0010600327	SCREW AND GASKET
20	H0120203998	FASTENER DOOR HINGE
21	H0120102550	DOOR SHELL MOLDING(RIGHT)
22	H0120400354	DISPENSER DETERGENT
23	H0120600352	FIXING SCREW
24	H0120600754A	SCREW
25	H0120205043AB	BLOCK DOOR TONGUE
26	H0120600363	SCREW TAPPING NST4.2 X 13
27	H0120205040AB	DOOR TONGUE
28	H0120301154B	COTTON FELT
29	H0120400248A	HARNESS
30	H0120200437	SLEEVE DOOR FIXING
31	H0120102488	INNER DOOR SHELL STD
32	H0120200435	BASE ADJUSTER DOOR
33	H0120400241B	FLOOR LIGHT INDICATOR
34	H0120204992	SOUND INSULATING PAD

INSTALLATION COMPONENTS

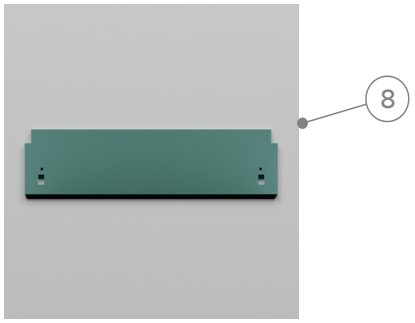

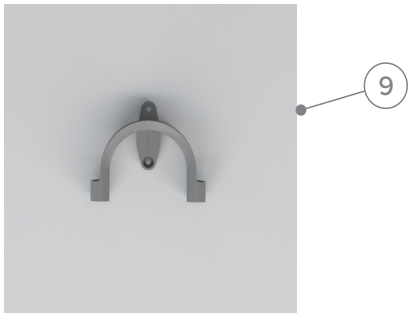

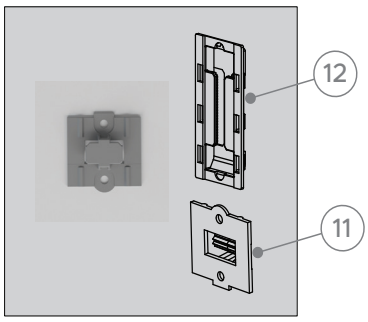



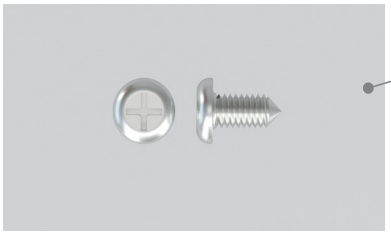



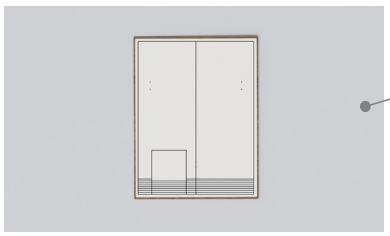



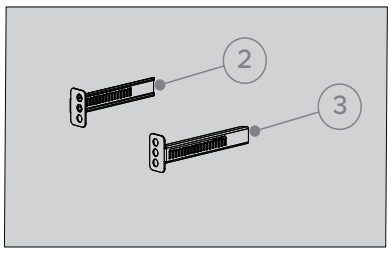

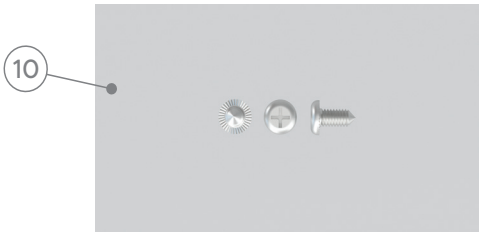



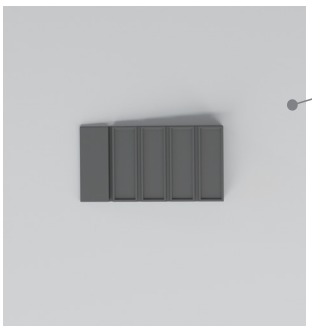

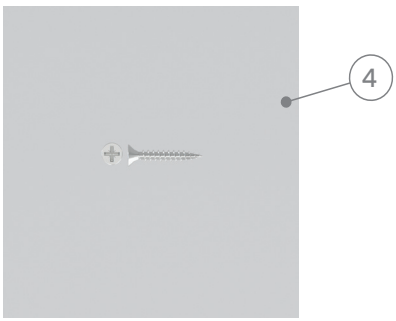

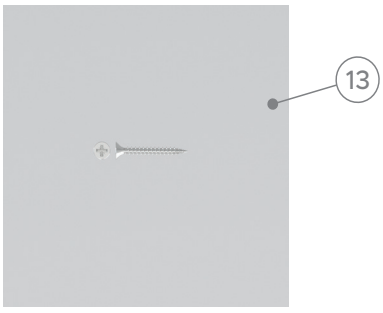

DWG 007556

INSTALLATION COMPONENTS

PART	PART NUMBER	PART DESCRIPTION
1	H0120201484	SPACER PLASTIC
2	H0120102272	BRACKET ADJUST TIE ROD LH
3	H0120102274	BRACKET ADJUST TIE ROD RH
4	H0120600071	SCREW SELF-TAPPING M4X25
5	527208	TAPE UNDERBENCH CONDENSATION
6	H0120808779	AIR DUCT ASSY
7	H012G801050	SCREW M4X13
8	H0120301044	INSULATION SMALL
9	420667P	GUIDE DRAIN HOSE PKD
10	H0120600352	FIXING SCREW
11	H0120200434	SLIDER ADJUSTER DOOR
12	H0120200435	BASE ADJUSTER DOOR
13	H0120600022	SCREW SELF TAPPING M3.9X38
14	H0070601355	SCREW M4X50
15	H00299300183700	WASHER
16	90002329	DOOR TEMPLATE-EN-DW60U4I2 STD DOOR

FISHERPAYKEL.COM

© Fisher & Paykel Appliances 2026. All rights reserved.

The models shown in this guide may not be available in all markets and are subject to change at any time.

The product specifications in this guide apply to the specific products and models described at the date of issue. Under our policy of continuous product improvement, these specifications may change at any time.

For current details about model and specification availability in your country, please go to our website or contact your local Fisher & Paykel dealer.

85731-A 06.26